HV461 15REN Ring Generator

Features

- ► $93V_{RMS}$ ring amplitude independent of load
- ► Low THD sine wave output
- ► Capable of driving 15REN at $93V_{RMS}$
- ► 8 logic-selectable ring frequencies
- ► 3 logic-selectable amplitudes plus DC only
- ► Overload protection
- ► Logic-level fault indicator
- ► Logic-level enable control
- ► Ringing relay sync signal with adjustable lead time
- ► Inherent 4 quadrant operation (no mode switching)
- ► Typical 80% efficiency from 5 to 15REN
- ► Floating output allows application of external DC output offset
- ► Very low voiceband noise

General Description

Presented below is an example design for a ring generator based on the HV461 controller IC. It is designed to operate from standard +3.3 and -48V supplies and is capable of driving loads up to 15REN at 93VRMS. The design is split into a controller section and a power section. The controller side is powered solely from +3.3V while the power stage is powered solely from -48V. This separation allows flexibility in designing a ring generator to operate from voltages and polarities other than -48V. Note, however, that galvanic isolation does not exist between the controller and the output. If galvanic isolation is required, please contact Supertex's applications department.

Output load regulation is excellent, allowing for long loop lengths at full load. Since the ring generator output is essentially floating, external DC output offset may be applied to the output for providing DC line feed.

Specifications

Parameter	Value
V_{DD}	+3.3V ±10%
V_{PWR}	-40V to -72V
I_{PWR}	26mA (no load)
	3.0mA (disabled)
Efficiency	80% typ (5 to 15REN)
Max output	$23W_{RMS}$
Ring frequencies	16⅔, 20, 25, 30, 33⅓, 50, 60Hz ±0.01%
Ring amplitude	$93V_{RMS}$ ±5%
Load regulation	<1% (0REN to 15REN)
Output DC offset	0V ±5V
Max applied output offset (ref to GND)	±67V
Output THD (first 40 harmonics)	<5%
Operating temperature	-40°C to +85°C

Simplified Typical Application

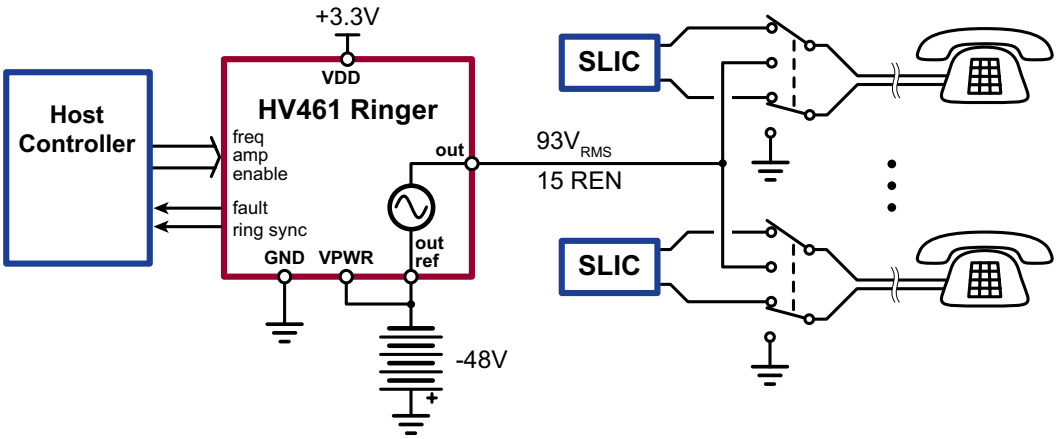

Supply Voltages (V_{DD} & V_{PWR})

The HV461 ringer operates from two external supplies. V_{DD} at +3.3V supplies the HV461 controller, while V_{PWR} at -48V supplies the power stage. A boost converter supplied by V_{DD} and controlled by the HV461 provides a +9.6V gate drive supply. Altho this ringer is designed to operate from a nominal -48V supply, an HV461-based ringer may be designed to operate from a V_{PWR} source of other voltages or polarity.

Ring Frequency (F0, F1, F2)

Output ring frequency is controlled via logic signals applied to the F0 thru F2 inputs. These inputs have 100kΩ pull-down resistors. Logic high is >0.7V_{DD}, and logic low is <0.3V_{DD}. The inputs are 5V tolerant.

F2	F1	F0	f_{RING}
0	0	0	16⅔Hz
0	0	1	20Hz
0	1	0	25Hz
0	1	1	30Hz
1	0	0	33⅓Hz
1	0	1	40Hz
1	1	0	50Hz
1	1	1	60Hz

Ring frequency may be changed at any time. Changes are effected only at the next zero crossing of the sine wave.

The HV461 is capable of any arbitrary ring frequency from 12Hz thru 63Hz by applying a logic level signal at the desired frequency to the HV461's f_{RING} input. See the data sheet for further information.

Ring Amplitude

The HV461 design example provides a 93VRMS full scale ring signal. The design may be modified for other ring amplitudes by changing the feedback resistors.

Note: R_{12}= R_9 and R_{11}= R_{10}. Either R_9 and R_{12} may be changed, or R_{10} and R_{11} may be changed. These resistors must be 1% tolerance and must be changed as a pair.

$$V_{OUT(RMS)} = 0.7V_{RMS}\frac{R_{10}}{R_9}$$

For ring amplitudes above 93V_{RMS} the transformer turns ratio must be increased in addition to changing the feedback resistors. The voltage ratings for the secondary side components may also need to be increased. Contact Supertex's applications department for further assistance.

The HV461 is capable of 4 logic-selectable ring amplitudes. The following table lists the amplitudes as a percentage of full scale output. Full scale output is given by the previous equation.

A1	A0	Amplitude
0	0	0% (DC)
0	1	50%
1	0	75%
1	1	100%

The inputs are pulled to V_{DD} thru 100kΩ resistors. Logic high is >0.7V_{DD}, and logic low is <0.3V_{DD}. The inputs are 5.0V tolerant.

Output Offset

Output DC offset of the HV461 ringer is fixed at 0V nominal. Since the ring generator output is floating, output offset may be achieved by externally applying a DC voltage to the OUT REF pin. This voltage may be from the 48V supplying the power stage or from a second source.

The externally applied DC offset must not result in the voltage difference between GND and OUT REF from exceeding ±67V.

The HV461 is actually capable of directly generating 3 arbitrary DC output offsets plus zero DC offset, selectable via two logic-level inputs. However, this requires a more complex transformer design and reduces efficiency. Externally applied DC output offset is strongly preferred.

Overload Protection

An overload protection circuit limits peak input power to about 60W. An output overload that causes input power to exceed this value will result in clipping of the sine wave (since peak input power occurs near the peaks of the sine wave). The Fault output is activated during an overload and clears after the overload is removed.

The ringer is able to withstand brief (<2s) operation into a zero ohm short without damage. However, it is recommended that series limiting resistors be employed in each phone line.

Enable

Ringer output is controlled via a logic signal applied to the Enable input.

Enable	Output
0	Off
1	On

When enabled, the ring signal starts immediately at 0° (sine wave zero crossing). When disabled, ringer output ceases at the next sine wave zero crossing (either 0° or 180°, whichever is next).

Enable is internally pulled high via a 100kΩ resistor. Logic high is >0.7_{VDD}, and logic low is <$0.3V_{DD}$. The enable input is 5.0V tolerant.

Fault Indication (FAULT)

An active low, open drain output is provided to indicate a fault condition, which may include any of the following:

- V_{DD} (3.3V supply) undervoltage
- V_{GD} (gate drive supply) undervoltage
- PWM overrange (typically caused by 48V undervoltage)
- Overload

If the fault output remains active when the ring generator is disabled (ENABLE = 0), it can be deduced that a V_{DD} or V_{GD} undervoltage condition caused the fault. Otherwise, it is an overload condition or 48V undervoltage condition and appropriate action may be taken. Internal filtering prevents spurious activation of the Fault signal. For this reason, allow at least 500ms after disabling before checking to see if Fault clears.

Logic low is <200mV with a 1.0mA load. Logic high is pulled up to V_{DD} via a 10kΩ resistor.

Ring Relay Sync Signal (SYNC)

A logic level signal is provided for the purpose of synchronizing the opening and closing of ringing relays to coincide with the zero crossings of the ringing signal. Doing so reduces abrupt voltage changes, which in turn reduces current surges and arcing. As designed, the ringer provides a high-going signal 2.5ms before zero crossing, allowing time for control circuit delays and relay response time. The sync signal transitions low again near the actual zero crossing. Keep in mind that the sync signal coincides with 0° and 180° on the sine wave, not with the zero-volt crossing when DC output offset is employed. Thus when a -48V external offset is applied, ring sync will occur when the sine wave crosses -48V.

Lead time may be altered by changing on-board timing components.

$$t_{LEAD} = 0.48R_7C_1 + 1.3ms$$

The 1.3ms takes into account the delay between the digital sine wave synthesizer and the ringer output. Either R_7 or C_1 may be changed, altho R_7 should be kept between 16kΩ and 300kΩ, and C_1 between 68pF and 100nF.

Logic low is <200mV and logic high is >(V_{DD}-200mV).

HV461 Ringer: Controller Section

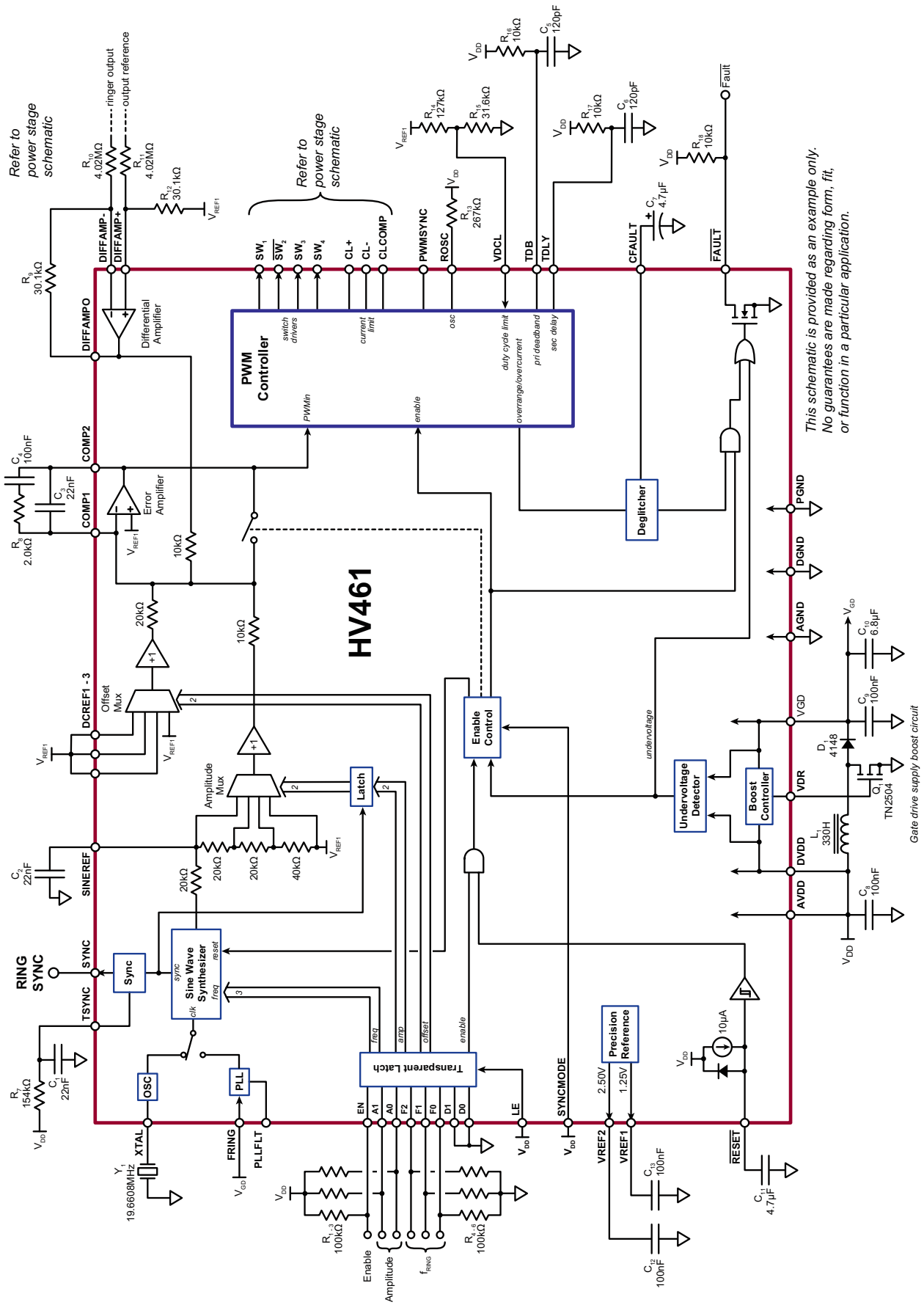

HV461 Ringer: Power Section

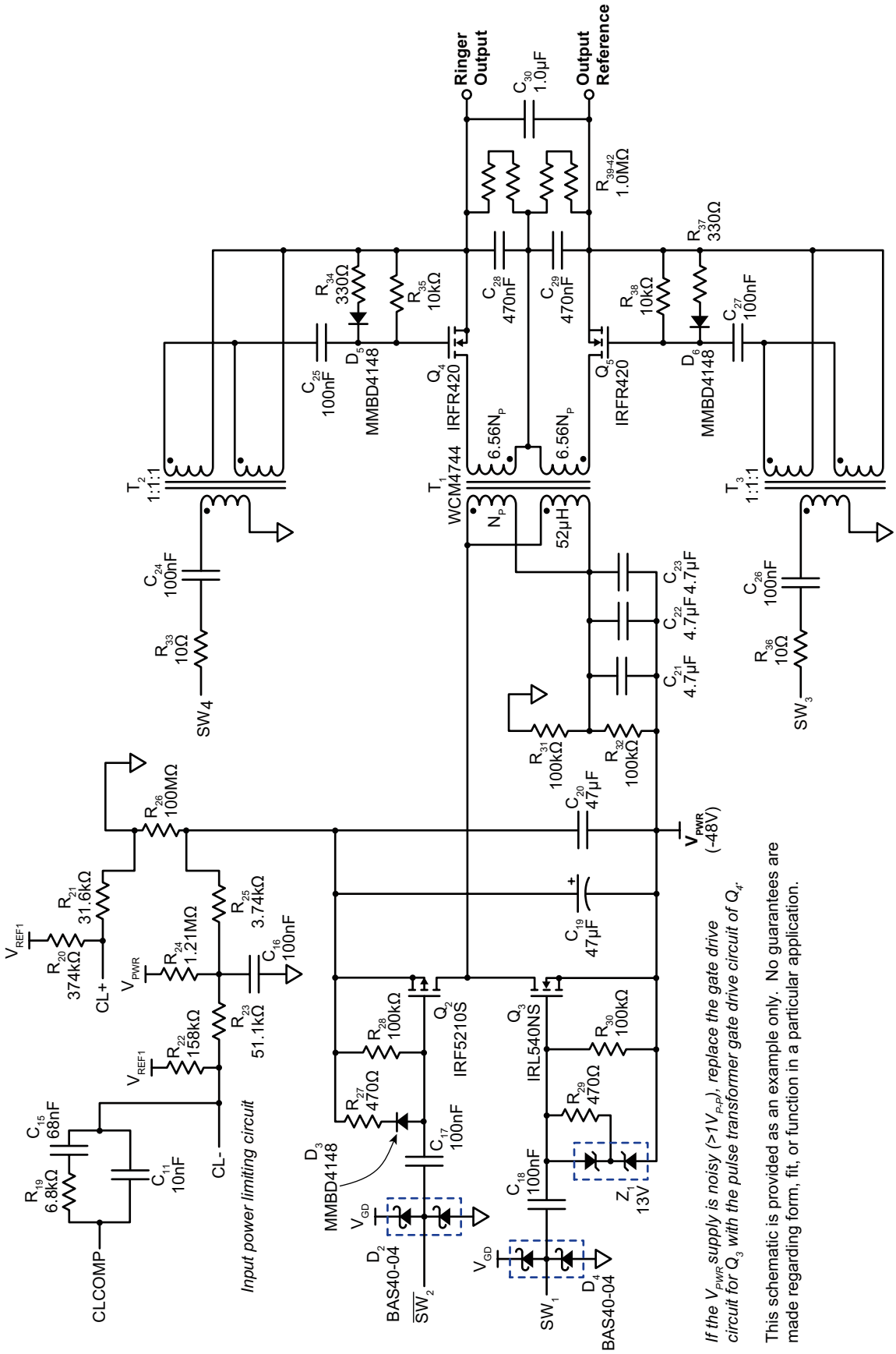

HV461 Ringer: Bill Of Materials

Desig	Description	Value	Tol	Rating	Package	Mfg	Mfg Part #
R1	Resistor	100kΩ	5%	62mW	0603	any	-
R2	Resistor	100kΩ	5%	62mW	0603	any	-
R3	Resistor	100kΩ	5%	62mW	0603	any	-
R4	Resistor	100kΩ	5%	62mW	0603	any	-
R5	Resistor	100kΩ	5%	62mW	0603	any	-
R6	Resistor	100kΩ	5%	62mW	0603	any	-
R7	Resistor	154kΩ	1%	62mW	0603	any	-
R8	Resistor	2.0kΩ	5%	62mW	0603	any	-
R9	Resistor	30.1kΩ	1%	62mW	0603	any	-
R10	Resistor	4.02MΩ	1%	250mW	1206	any	-
R11	Resistor	4.02MΩ	1%	250mW	1206	any	-
R12	Resistor	30.1kΩ	1%	62mW	0603	any	-
R13	Resistor	267kΩ	1%	62mW	0603	any	-
R14	Resistor	127kΩ	1%	62mW	0603	any	-
R15	Resistor	31.6kΩ	1%	62mW	0603	any	-
R16	Resistor	10kΩ	5%	62mW	0603	any	-
R17	Resistor	10kΩ	5%	62mW	0603	any	-
R18	Resistor	10kΩ	5%	62mW	0603	any	-
R19	Resistor	6.8kΩ	5%	62mW	0603	any	-
R20	Resistor	374kΩ	1%	125mW	0805	any	-
R21	Resistor	31.6kΩ	1%	62mW	0603	any	-
R22	Resistor	158kΩ	1%	62mW	0603	any	-
R23	Resistor	51.1kΩ	1%	62mW	0603	any	-
R24	Resistor	1.21MΩ	1%	62mW	0603	any	-
R25	Resistor	3.74kΩ	1%	62mW	0603	any	-
R26	Resistor	100mΩ	5%	500mW	2010	any	-
R27	Resistor	470Ω	5%	125mW	0805	any	-
R28	Resistor	100kΩ	5%	62mW	0603	any	-
R29	Resistor	470Ω	5%	125mW	0805	any	-
R30	Resistor	100kΩ	5%	125mW	0805	any	-
R31	Resistor	100kΩ	5%	125mW	0805	any	-
R32	Resistor	100kΩ	5%	125mW	0805	any	-
R33	Resistor	10Ω	5%	62mW	0603	any	-
R34	Resistor	330Ω	5%	125mW	0805	any	-
R35	Resistor	10kΩ	5%	62mW	0603	any	-
R36	Resistor	10Ω	5%	62mW	0603	any	-
R37	Resistor	330Ω	5%	125mW	0805	any	-

HV461 Ringer: Bill Of Materials *(cont.)*

Desig	Description	Value	Tol	Rating	Package	Mfg	Mfg Part #
R38	Resistor	10kΩ	5%	62mW	0603	any	-
R39	Resistor	1.0MΩ	5%	250mW	1206	any	-
R40	Resistor	1.0MΩ	5%	250mW	1206	any	-
R41	Resistor	1.0MΩ	5%	250mW	1206	any	-
R42	Resistor	1.0MΩ	5%	250mW	1206	any	-
C1	Capacitor, ceramic X7R	22nF	10%	6.3V	0603	any	-
C2	Capacitor, ceramic X7R	22nF	10%	6.3V	0603	any	-
C3	Capacitor, ceramic X7R	22nF	10%	6.3V	0603	any	-
C4	Capacitor, ceramic X7R	100nF	10%	6.3V	0603	any	-
C5	Capacitor, ceramic NPO	120pF	10%	6.3V	0603	any	-
C6	Capacitor, ceramic NPO	120pF	10%	6.3V	0603	any	-
C7	Capacitor, tantalum	4.7µF	10%	6.3V	EIA-A	any	-
C8	Capacitor, ceramic X7R	100nF	10%	6.3V	0805	any	-
C9	Capacitor, ceramic X7R	100nF	10%	16V	0805	any	-
C10	Capacitor, tantalum	6.8µF	20%	16V	EIA-A	any	-
C11	Capacitor, tantalum	4.7µF	10%	6.3V	EIA-A	any	-
C12	Capacitor, ceramic X7R	100nF	10%	6.3V	0805	any	-
C13	Capacitor, ceramic X7R	100nF	10%	6.3V	0805	any	-
C14	Capacitor, ceramic X7R	10nF	10%	6.3V	0805	any	-
C15	Capacitor, ceramic X7R	68nF	10%	6.3V	0805	any	-
C16	Capacitor, ceramic X7R	100nF	10%	6.3V	0805	any	-
C17	Capacitor, ceramic X7R	100nF	10%	10V	0805	any	-
C18	Capacitor, ceramic X7R	100nF	10%	100V	1210	any	-
C19	Capacitor, aluminum to ESR	47µF	20%	80V	-	Tecate	MXZX-080/470M10X10
C20	Capacitor, ceramic X7R	4.7µF	20%	100V	2220	Murata	GRM55ER72A475K
C21	Capacitor, ceramic X7R	4.7µF	20%	100V	2220	Murata	GRM55ER72A475K
C22	Capacitor, ceramic X7R	4.7µF	20%	100V	2220	Murata	GRM55ER72A475K
C23	Capacitor, ceramic X7R	4.7µF	20%	100V	2220	Murata	GRM55ER72A475K
C24	Capacitor, ceramic X7R	100nF	20%	16V	0805	any	-
C25	Capacitor, ceramic X7R	100nF	20%	16V	0805	any	-
C26	Capacitor, ceramic X7R	100nF	20%	16V	0805	any	-
C27	Capacitor, ceramic X7R	100nF	20%	16V	0805	any	-
C28	Capacitor, film	470nF	20%	400V	-	ITW Paktron	474M400RA6
C29	Capacitor, film	470nF	20%	400V	-	ITW Paktron	474M400RA6
C30	Capacitor, film	1.0µF	20%	250V	-	ITW Paktron	105M250RA6
L1	Inductor	330µH	20%	190mA	-	Coiltronics	SD12-331

HV461 Ringer: Bill Of Materials *(cont.)*

Desig	Description	Value	Tol	Rating	Package	Mfg	Mfg Part #
T1	Transformer	-	-	-	-	West Coast Magnetics	WCM4744
T2	Pulse Transformer	-	-	-	-	Pulse	PO544
T3	Pulse Transformer	-	-	-	-	Pulse	PO544
Y1	Crystal	19.6608 MHz	-	-	ECX-64A	ECS	ECS-196-S-23A-EN-TR
D1	Diode	-	-	-	SOT-23	any	MMBD4148
D2	Diode, Dual Schottky	-	-	-	SOT-23	any	BAS40-04
D3	Diode	-	-	-	SOT-23	any	MMBD4148
D4	Diode, Dual Schottky	-	-	-	SOT-23	any	BAS40-04
D5	Diode	-	-	-	SOT-23	any	MMBD4148
D6	Diode	-	-	-	SOT-23	any	MMBD4148
Z1	Zener, dual, common cathode	12V	10%	300mW	SOT-23	any	DZ23C12
Q1	MOSFET, N-channel	-	-	40V	SOT-89	Supertex	TN2504N8
Q2	MOSFET, P-channel	117mΩ	-	100V	D^2 pak	IR	IRF9540NS
Q3	MOSFET, N-channel	110mΩ	-	100V	D^2 pak	IR	IRF540NS
Q4	MOSFET, N-channel	3Ω	-	500V	D pak	IR	IRFR420
Q5	MOSFET, N-channel	3Ω	-	500V	D pak	IR	IRFR420
IC1	Ring Controller	-	-	-	TQFP-48	Supertex	HV461FG

Supertex inc.
1235 Bordeaux Drive, Sunnyvale, CA 94089
Tel: 408-222-8888
www.supertex.com